SUBARU

BRZ

For the love of the drive.

Every car has a purpose. For the BRZ, it's this: to make driving more enjoyable, for all those who drive it. Designed around the low-profile, high-RPM SUBARU BOXER® engine, the BRZ is the quintessential performance formula—front engined, rear-wheel drive and feather-light. Get it out on the road, and you'll see. This is how sports cars were meant to be built—and how they were meant to drive.

Embrace the road.
Get closer to it.

Low centre of gravity.

With its optimally placed power plant, the 2+2 BRZ conquers the pavement, whether it's on a straightaway or a winding mountain road. From roofline to seat positioning to streamlined body, every aspect of its design works together to create one of the lowest centres of gravity in any production vehicle on the road today. Get in, put it in gear, and the rest will come naturally.

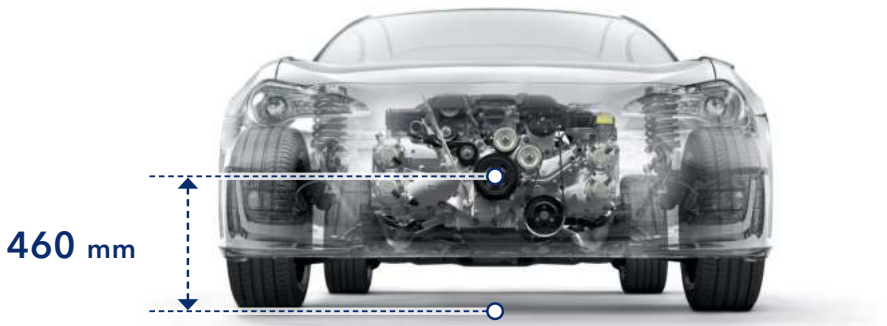

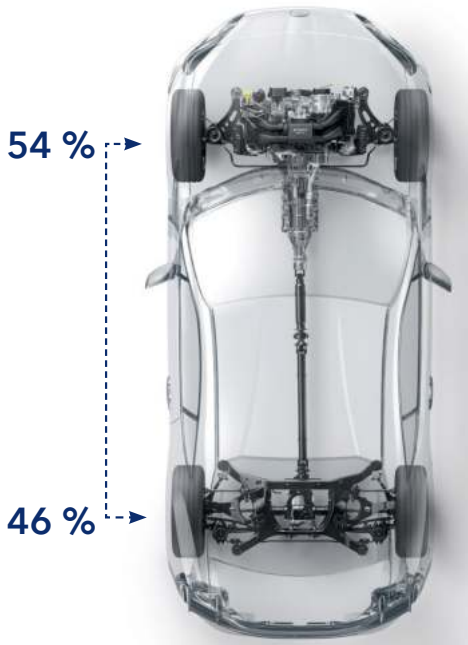

Balance

50/50. It's a magic number for sports cars, symbolizing a theoretical vehicle with perfect weight distribution to the front and rear wheels. The Subaru BRZ comes very close with 54% of its weight over the front axle and 46% over the rear–the recipe for ideal handling performance.

Performance comes from within.

The BRZ delivers enjoyment at any speed. That's because it was engineered to feel responsive, precise, and balanced.

Sport Suspension

When it comes to performance driving, suspension is your connection to the road. BRZ is dialed in with spring rates, dampers, and stabilisers optimized to keep you in control during quick manoeuvres.

Responsive Engine

Need to match revs for a downshift? No problem. The 205-horsepower[1] direct- and port-injected 2.0-litre, 4-cylinder SUBARU BOXER® engine is a driver's best friend, combining linear, usable power delivery with high-RPM excitement.

Responsive Transmission

Get fully engaged with a close-ratio, 6-speed manual transmission with superb shift feel. Paddle shifters and downshift blipping control in the available 6-speed automatic transmission further enhance the sport experience with two distinct performance shift modes.[2]

TORSEN®[3] Limited-slip Differential

With the same type of advanced TORSEN® limited-slip differential (LSD) as the high-performance WRX STI, the BRZ's LSD assures control in high-speed turns while enhancing confidence on rough roads.

1 Manual transmission models only.
2 Automatic transmission models only.
3 TORSEN® is a registered trademark of JTEKT Corporation.

SUBARU
JRX 268

Sport-tech RS. The BRZ, amplified.

For the discerning few who want a BRZ that can be pushed harder, look no further than the BRZ Sport-tech RS.

10-spoke Alloy Wheels

The dark-grey 17 x 7.5-inch, 10-spoke aluminum-alloy wheels are a perfect complement to the timeless looks and memorable performance of the BRZ.

SACHS®[1] Performance Dampers

SACHS® performance dampers give the Sport-tech RS more stability, better ride quality, and more responsive handling.

Brembo®[2] Performance Brakes

Serious drivers know the importance of having powerful brakes that can withstand the rigours of performance driving. Brembo® performance brakes give the lightweight BRZ Sport-tech RS powerful, composed stopping power, corner after corner.

1 SACHS® is a registered trademark of ZF Sachs AG Corporation.
2 Brembo® is a registered trademark of Brembo S.p.A.

Every driver's happy place.

Sit in a Subaru BRZ, and feel it instantly. Performance lovers will intuitively understand an interior completely focused on the driver's sense of connection and control.

Folding Rear Seatback

It's a pure sports car, of course. But fold down the rear seatback, and you'll find space for golf bags, diving gear, hockey sticks, racing tires—whatever inspires you.

Leather/Alcantara®[1] Trim (Sport-tech, Sport-tech RS)

Performance-design front seats are available with premium leather trim and grippy Alcantara® inserts, featuring bolsters to help keep you in position while cornering. The seats also feature a low-profile design, complementing the low centre of gravity of the BRZ.

1 Alcantara® is a registered trademark of Alcantara S.p.A. Standard on BRZ Sport-tech and Sport-tech RS.

Media
Missing Summer
Greater Catharsis
Sonicer Wurltzer
12:00
22.0
23.5
AUTO
OFF
DUAL

The centre of connection.

Driver-centric ergonomics personalize every drive. With a steering wheel that fits comfortably in your palms and a conveniently placed shift lever, you can take control of the Subaru BRZ with intuitive fluidity. The available Multi-information Display Meter includes a 4.2-inch colour TFT and sports car display, offering performance details and drive information.[1]

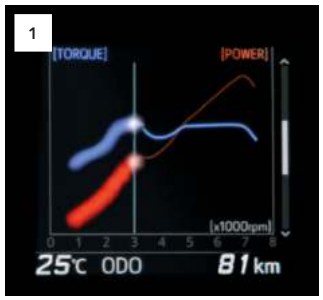

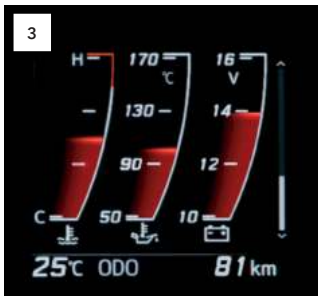

1 Engine Data Display

This displays the vehicle's engine performance curves, including torque and power curves.[2]

2 G-monitor Display

This exclusive Subaru BRZ screen shows a G-ball with peak hold, a steering angle gauge, braking force, and throttle angle.[3]

3 Temperature Gauge Display

These gauges display engine coolant temperature, oil temperature, and voltage.

4 Stop Watch Display

Keep track of your driving performance with a stop watch.

5 Trip Computer Display

This display allows you to monitor your average speed, trip time, and trip distance.

Connect to your world.

The 7-inch touchscreen infotainment system with navigation lets you stay connected so you can simply focus on the drive.[4] The SUBARU STARLINK® system features standard Apple CarPlay®[5,6] and Android™ Auto[5,7] for easy access to your music and apps, while voice-recognition capabilities allow for hands-free use of system functions.

1 Not available on all trims. Please see retailer for details. 2 Torque and power curves are not actual measurements and are based on preset values. 3 G-monitor can only be displayed when vehicle is stopped. 4 Driver is always responsible for safe and attentive driving. Please refrain from operating the touchscreen while driving. 5 Compatible smartphone and applications required. Data provided by smartphone is displayed on the audio system screen. Some provinces prohibit the operation of handheld electronic devices while operating a vehicle. Smartphone apps should only be launched when vehicle is safely parked. Your wireless carrier's rates may apply. 6 Apple CarPlay® is a registered trademark of Apple Inc. 7 Android™ is a trademark of Google LLC.

Subaru Core Technology

From conception, the BRZ was engineered as a symbol of sports car purity. Uniquely low and compact, the reliable SUBARU BOXER® engine was chosen as the foundation. From there, the ideal sports coupe would come to fruition—one with a lightweight, balanced chassis and a component few driving purists would live without: rear-wheel drive.

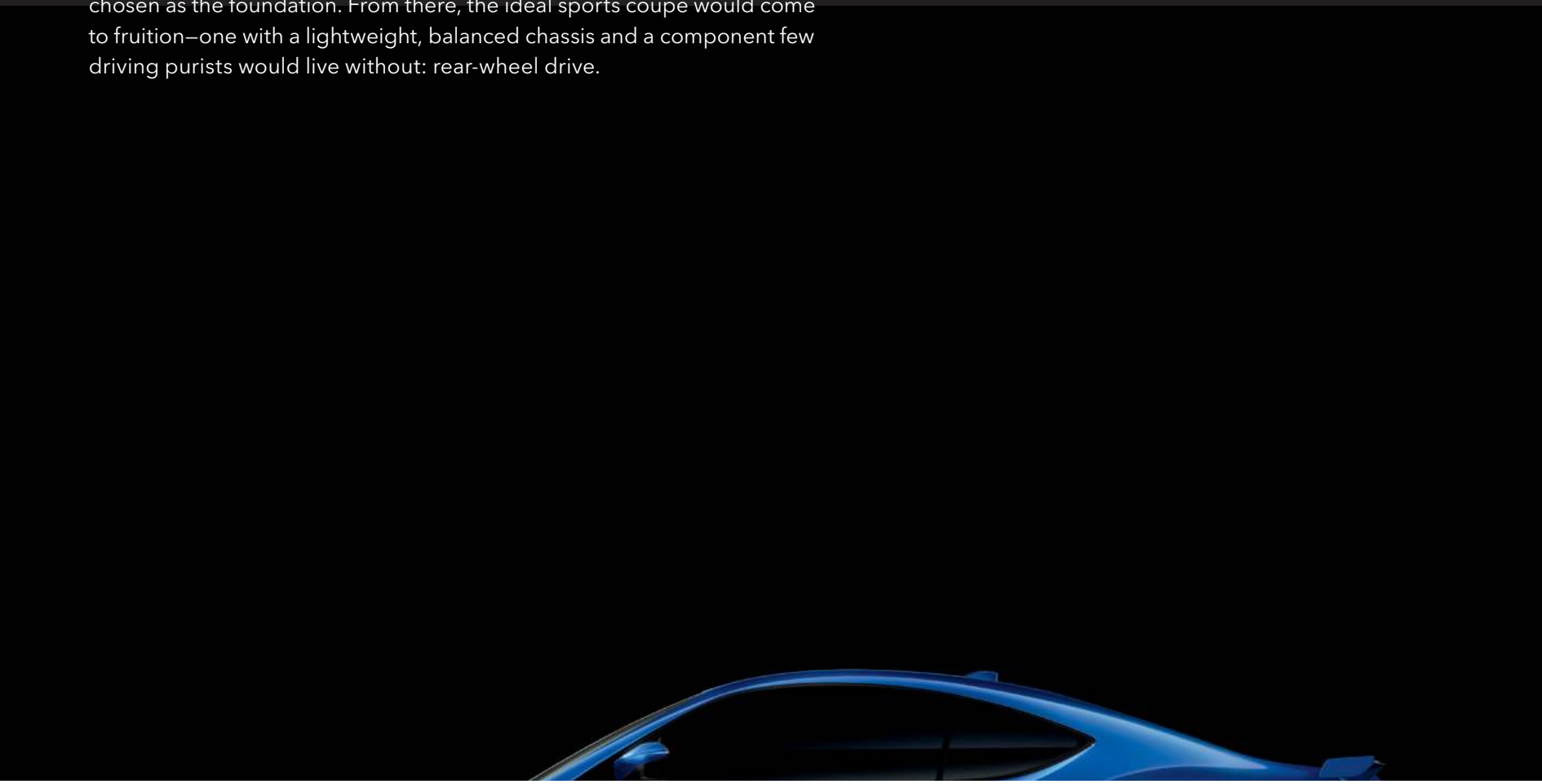

Sports Car Drivetrain

Laid out symmetrically, the SUBARU BOXER® engine puts the crankshaft perfectly in line with the driveshaft for tremendous stability and dynamic agility. Plus, the rear-wheel drive configuration allowed us to move the engine farther back to give you precise control over your cornering attitude. We combined this agile platform with a quick-ratio steering system that's tuned to react with astounding precision and immediacy to your input.

Aerodynamics

Its fluid lines aren't just for looks. Thanks to advanced design, the Subaru BRZ is able to achieve a slippery coefficient of drag of just 0.27.[1]

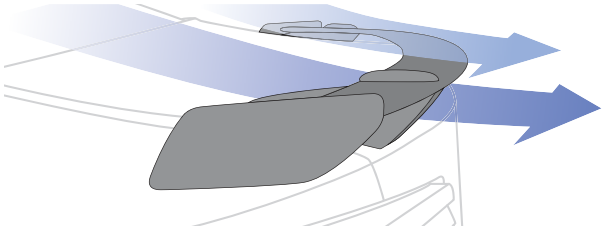

MANUAL TRANSMISSION

MAX OUTPUT:
205 hp @ 7,000 rpm

MAX TORQUE:
156 lb-ft @ 6,400–6,800 rpm

AUTOMATIC TRANSMISSION

MAX OUTPUT:
200 hp @ 7,000 rpm

MAX TORQUE:
151 lb-ft @ 6,400–6,600 rpm

Floor it, and it will floor you.

Usable Power

Engage the six-speed transmission, and push it. Rev it. Smile. At any rpm, you've got the power, with the SUBARU BOXER® engine's horizontally opposed pistons, producing over 100 hp per litre. It's excitement in abundance, with less environmental impact.

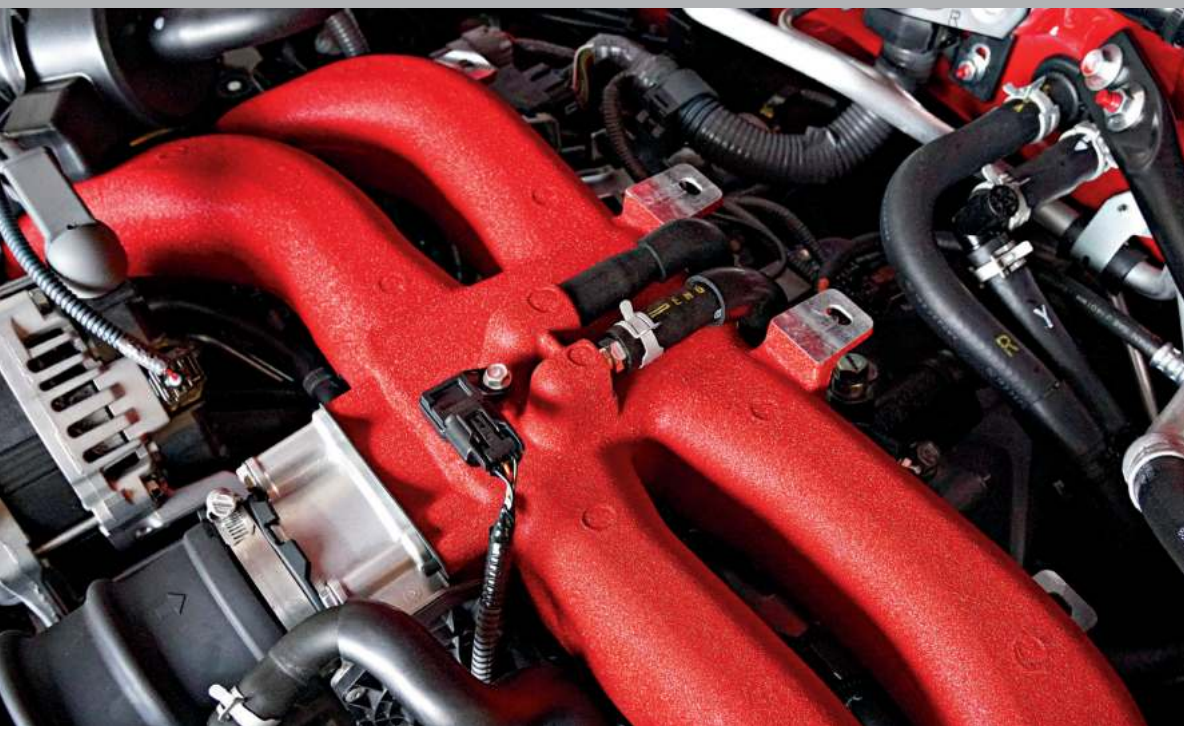

The Classic SUBARU BOXER® Engine

It's in Subaru's soul, even its DNA. With up to 205 hp, the Subaru BRZ's 2.0-litre SUBARU BOXER® engine is the fast-beating heart inside the sleek sinuous body. Thoughtful engineering brings it close to the driver, for the ultimate in weight balance and fine, exacting handling. Radical direct-and-port fuel injection technology help deliver precise ignition for instant responsiveness and efficiency.

Performance Suspension

A fully independent suspension brings out every bit of agility and responsiveness the Subaru BRZ has to offer. MacPherson-type front struts help maximize rigidity and a feeling of direct control by allowing the SUBARU BOXER® engine to be placed even lower in the chassis. And a double-wishbone rear design soaks up bumps without sacrificing control.

1 BRZ Sport-tech RS Cd - 0.28.

Safety is also performance.

The excitement of performance can sometimes overshadow the details of safety, but we have given the Subaru BRZ an extensive protection system because your safety is always at the forefront of what we design. The capability of Vehicle Stability Control helps keep you on your path, while peace of mind is made possible by the protection of airbags and ring-shaped reinforced framing.

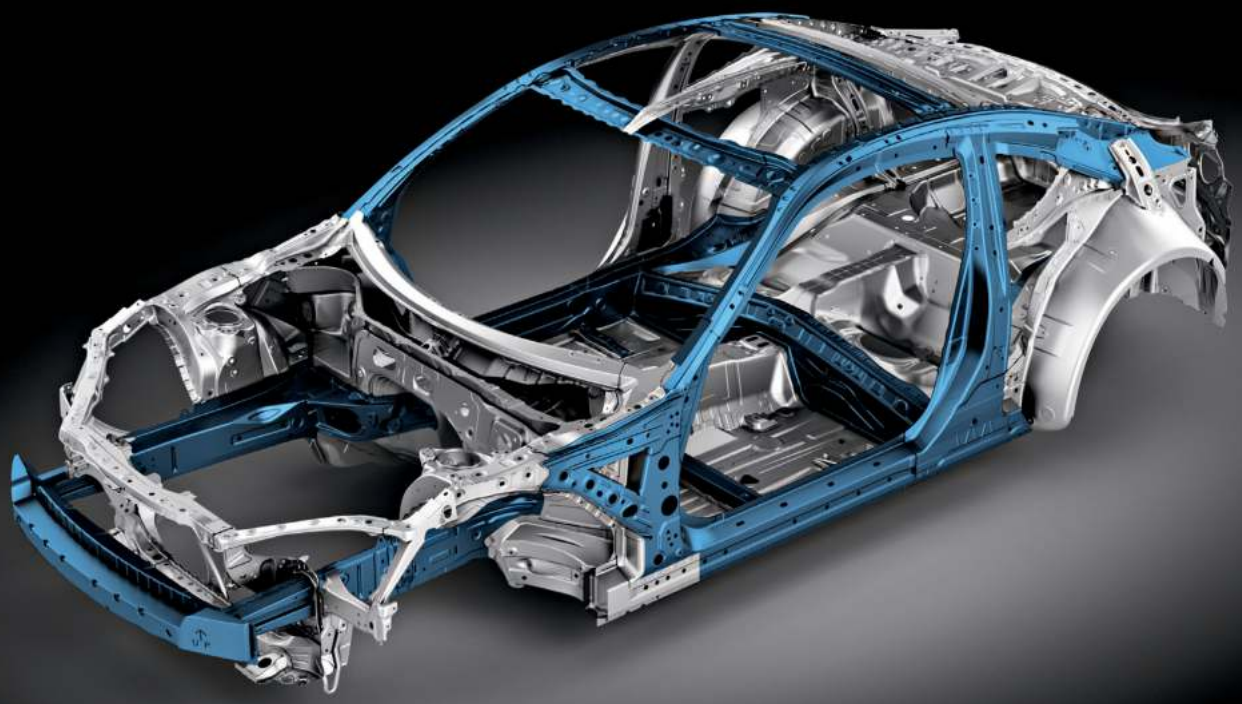

Lightweight Body

Simplicity in design and extensive use of high-tensile steel has helped reduce weight while making the chassis more rigid and precise. What's more, an aluminum hood further lightens the vehicle while bringing the centre of gravity even lower.

Ring-shaped Reinforcement Frame

The Subau BRZ offers intense control, and its protection is just as intense. Its frame design strengthens the passenger cabin from the roof to the doors, pillars, and floor. This design, bolstered by generous use of high-tensitle steel, helps to dissipate impact energy away from the occupants in a collision.

1 SRS: Supplemental Restraint System. Effective when used in conjunction with seatbelts.

SRS[1] Airbags

Heightened control and visibility are elemental to the Subaru BRZ. However, you'll also have the confidence of knowing that, should something unfortunate happen, you have front, front-side, and curtain SRS[1] airbags as standard equipment to help protect you from an impact.

Vehicle Stability Control

This advanced electronic system monitors an array of sensors—including braking, steering, and yaw sensors—to help keep you from losing control as you push the Subaru BRZ to its limits.

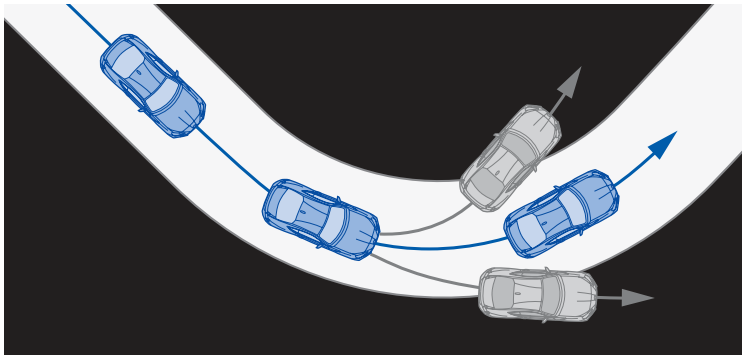

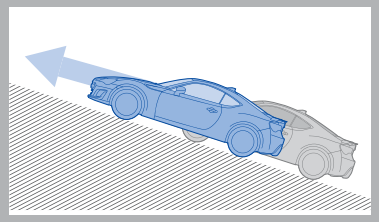

Hill Start Assist

Say goodbye to the "handbrake hill-start." To help you avoid rolling downhill when starting from a stop on steep hills or slopes, Hill Start Assist temporarily holds the car steady when the driver releases the brake pedal to press the accelerator pedal.

Rearview Camera

The BRZ features a standard Rearview Camera that gives you a clearer view of the area behind your vehicle for extra visibility when you need it.

2020 BRZ | Features & Dimensions

Fog Lights[1]

Brembo®[2,3] Performance Braking System

LED Headlights

Dual-zone Automatic Climate Control[1]

7.0-inch Infotainment System with Navigation

Heated Front Seats[1]

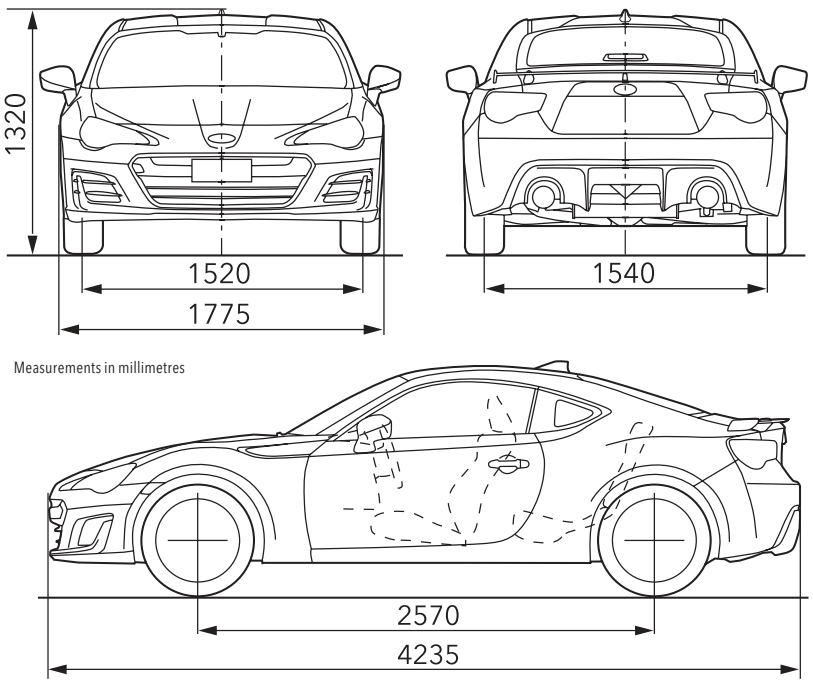

Measurements in millimetres

Steering **BRZ, BRZ Sport-tech & BRZ Sport-tech RS**
Electric power-assisted quick ratio rack-and-pinion. Ratio: 13.1:1. Turning radius: 5.4 metres curb-to-curb.

Brakes **BRZ & BRZ Sport-tech**
4-wheel disc, ventilated front and rear. 4-channel, dual-piston front and single-piston rear calipers. 4-sensor ABS with Electronic Brake-force Distribution (EBD).

BRZ Sport-tech RS
Brembo®[2] performance braking system. 4-wheel disc, ventilated front and rear. 4-channel, 4-piston front and 2-piston rear calipers. 4-sensor ABS with Electronic Brake-force Distribution (EBD).

Wheels **BRZ & BRZ Sport-tech**
17 x 7.0-inch 10-spoke aluminum-alloy. Black with machine finish.

BRZ Sport-tech RS
17 x 7.5-inch 10-spoke aluminum-alloy. Gunmetal grey finish.

Tires **BRZ, BRZ Sport-tech & BRZ Sport-tech RS**
215/45 R17 Michelin®[4] summer tires

BRZ

- 205-hp 2.0-litre 4-cylinder SUBARU BOXER® engine
- Close-ratio 6-speed Manual Transmission (6MT)
- Performance-tuned suspension and ultra-low centre of gravity
- TORSEN®[5] limited-slip rear differential
- 17-inch aluminum-alloy wheels
- Rear spoiler
- LED headlights with automatic leveling
- Premium cloth upholstery
- Leather-wrapped steering wheel with integrated controls
- Heated side mirrors
- Rearview Camera
- Driver and front-seat passenger front and side-impact airbags; side-curtain airbags[6]
- 7.0-inch infotainment system with navigation: AM/FM audio system with high-resolution capacitive touchscreen display with GPS navigation system, Apple CarPlay,®[7,9] Android™ Auto,[8,9] STARLINK® smartphone integration (including Aha™ radio),[9] dual USB port/iPod®[10] control, SMS text messaging capability, Bluetooth® mobile phone connectivity with voice activation and Bluetooth® streaming audio,[11] and SiriusXM® Satellite Radio[12] with Advanced Audio Features, SiriusXM® Traffic®[12] and Travel Link®[12] (Optional Services)

BRZ Sport-tech RS

Includes BRZ Sport-tech key features and adds/upgrades:

- 205-hp 2.0-litre 4-cylinder SUBARU BOXER® engine
- Close-ratio 6-speed Manual Transmission (6MT)
- Brembo®[2] performance braking system with 4-piston front and 2-piston rear calipers
- SACHS®[14] performance dampers
- Wider 17-inch aluminum-alloy wheels with gunmetal grey finish

BRZ Sport-tech

- 200-hp 2.0-litre 4-cylinder SUBARU BOXER® engine
- 6-speed Automatic Transmission (6AT) with manual-mode paddle shifters and rev-matching downshift control
- Performance-tuned suspension and ultra-low centre of gravity
- TORSEN®[5] limited-slip rear differential
- 17-inch aluminum-alloy wheels
- Rear spoiler
- LED headlights with automatic leveling
- Alcantara®[13] and leather-trimmed upholstery
- Leather-wrapped steering wheel with integrated controls
- Heated, sport-type front seats
- Heated side mirrors
- Performance instrument cluster with multifunction display featuring G-force metre, lap timer, performance gauges and more
- Dual-zone automatic climate control
- LED fog lights
- Proximity Key with Push-button Start
- Rearview Camera
- Driver and front-seat passenger front and side-impact airbags; side-curtain airbags[6]
- 7.0-inch infotainment system with navigation: AM/FM audio system with high-resolution capacitive touchscreen display with GPS navigation system, Apple CarPlay,®[7,9] Android™ Auto,[8,9] STARLINK® smartphone integration (including Aha™ radio),[9] dual USB port/iPod®[10] control, SMS text messaging capability, Bluetooth® mobile phone connectivity with voice activation and Bluetooth® streaming audio,[11] and SiriusXM® Satellite Radio[12] with Advanced Audio Features, SiriusXM® Traffic®[12] and Travel Link®[12] (Optional Services)

For a detailed list of specifications, features, accessories, and model comparisons, please visit **Subaru.ca** or your nearest authorized Subaru Retailer.

1 Standard on BRZ Sport-tech and Sport-tech RS trims. 2 Brembo® is a registered trademark of Brembo S.p.A. 3 Standard on BRZ Sport-tech RS. 4 Michelin® is a registered trademark of Michelin North America, Inc. 5 TORSEN® is a registered trademark of JTEKT Corporation. 6 The Supplemental Restraint System (SRS) (airbags) affords the driver and the front passenger additional protection in moderate to severe frontal and side-impact collisions and outboard 2nd-row passengers additional protection in moderate to severe side-impact collisions. This system provides supplemental protection only, and seatbelts must be worn in order to avoid injuries to out-of-position occupants upon airbag deployment and to provide the best combined protection in a serious accident. Children should always be properly restrained in one of the rear seats. See Owner's Manual for recommended seating position. 7 Apple CarPlay® is a registered trademark of Apple Inc. 8 Android™ is a trademark of Google LLC. 9 Compatible smartphone and applications required. Data provided by smartphone is displayed on navigation screen. Some provinces prohibit the operation of handheld electronic devices while operating a vehicle. Smartphone apps should only be launched when vehicle is safely parked. Aha™ is a trademark of Harman International Industries, Inc. Your wireless carrier's rates may apply. 10 Apple CarPlay® and iPod® are registered trademarks of Apple Inc. 11 Bluetooth® is a registered trademark of Bluetooth SIG,Inc., America. 12 Subscription required. 13 Alcantara® is a registered trademark of Alcantara S.p.A. 14 SACHS® is a registered trademark of ZF Sachs AG Corporation.

2020 BRZ | Colours

Exterior Colours

Crystal White Pearl

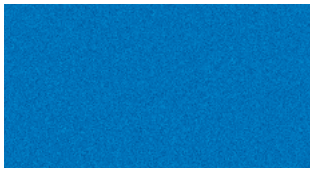

World Rally Blue Pearl

Pure Red

Magnetite Grey Metallic

Crystal Black Silica

Seat Material

Black Cloth (BC)

Black Leather / Alcantara® (BL)

Colour Combinations	BRZ	BRZ Sport-tech	BRZ Sport-tech RS
Crystal White Pearl	BC	BL	BL
World Rally Blue Pearl	BC	BL	BL
Pure Red	BC	BL	BL
Magnetite Grey Metallic	BC	BL	BL
Crystal Black Silica	BC	BL	BL

Subaru Warranties

Every Subaru vehicle is designed and built to offer our customers the highest possible level of quality and reliability. We are proud of our vehicles and proud to stand behind them with a comprehensive warranty. For 2020 model-year vehicles, the warranty on all Subaru vehicles consists of the following:

New Vehicle Limited Warranty (36 month/60,000 km) – Covers basic and major components for 36 months or 60,000 km.

Major Component Limited Warranty (60 month/100,000 km) – Extends coverage of major components (more than just powertrain) up to 60 months or 100,000 km.

Surface Corrosion Limited Warranty (36 month/60,000 km) – Covers surface corrosion to visible painted body panels for 36 months or 60,000 km.

Anti-Perforation Limited Warranty (60 month/unlimited km) – Covers perforation due to corrosion to body sheet metal panels for 60 months, regardless of kilometres.

Emission Control System Limited Warranty – Covers some emissions components for 36 months or 60,000 km and the major parts of the emission control system for 96 months or 130,000 km.

Parts and Accessories Limited Warranty – Covers Subaru parts and accessories installed by the retailer prior to retail delivery of the vehicle for 36 months or 60,000 km, and Subaru parts and accessories installed by the retailer after the retail delivery of the vehicle for 12 months or 20,000 km from the date of the installation.

The above information is an overview of warranty coverage and is not a warranty statement. If you wish to see more details regarding Subaru warranties, please refer to your Subaru warranty booklet, contact your local retailer or visit our Web site at subaru.ca.

Subaru 360 C.A.R.E. Program (36 months/unlimited km)

Access to dedicated Subaru 360 C.A.R.E. (Customer Assistance for Roadside Emergencies) Roadside Assistance Services, which includes access to 1,000 CAA and AAA offices throughout Canada and the United States. In addition to towing, coverage also includes Fuel Delivery, Battery Boost, Flat Tire Service, Lock-Out Service, Trip Accident & Mechanical Breakdown Assistance Service, Winching and Extrication Service, Personalized Trip Planning and Routing, Theft and Hit-and-Run Reward, and Arrest Bond Certificate.

The above information is an overview of services. If you wish to see more details regarding Subaru 360 C.A.R.E., please visit our Web site at subaru.ca.

Subaru Protection Plan

As a Subaru owner, you have expectations for a pleasurable, trouble-free ownership experience – now and into the future. Once your 36-month/60,000-km New Vehicle Limited Warranty period ends,[1] our Subaru Protection Plan (SPP) – the only vehicle service contract endorsed by Subaru Canada for Subaru vehicles – can prolong your hassle-free ownership experience with three levels of extended service contract coverage tailored to your needs: Powertrain Protection; Major Protection; or Complete Protection (best level of coverage to complement the 60-month/100,000-km Major Component Limited Warranty). SPP offers comprehensive mechanical and electrical coverage and a number of additional features and benefits, such as Roadside Assistance and Alternate Transportation, for up to 7 years or 160,000 kilometres from your vehicle's in-service date. Whether your vehicle is purchased or leased, SPP protects you and your investment. Be sure to ask your retailer for details or visit subaru.ca.

1 If you already own a Subaru vehicle and it is still within the 36-month/60,000-km New Vehicle Limited Warranty period, you are still eligible for SPP.

Subaru vehicles are uniquely designed to get out there more and to leave less behind. We build our vehicles for maximum longevity, because more time spent on the road equals less time spent in junkyards and landfills. Fully 98% of our vehicles sold in Canada over the last 10 years are still on the road today.[1] You'll also find very little waste created in the production of a Subaru. Many of our vehicles are built in the Subaru of Indiana Automotive, Inc., (SIA) factory, which was the first manufacturing facility in the U.S. to achieve zero-landfill status. Other Subaru facilities around the world now achieve similar goals in helping to preserve the environment. Respect for our surroundings is yet another way that Subaru vehicles help to build driver confidence for the road ahead.

1 Based on IHS Markit, Canadian Vehicles in Operation as of June 30, 2017, for Model Years 2008 to 2018 vs. Total New Registrations of those vehicles.

SUBARU

For a detailed list of specifications, features, accessories, and model comparisons, please visit Subaru.ca or your nearest authorized Subaru Retailer.

The Supplemental Restraint System (SRS airbags) affords the driver and passenger additional protection in some collisions. This system provides supplemental protection only, and seatbelts must be worn in order to avoid injuries to out-of-position occupants upon airbag deployment. The combination of SRS and seatbelts provides the best protection in a serious accident. All illustrations, specifications, features and photographs contained in this brochure are based on product information available at the time of its printing and may not be completely accurate following its publication. Colours shown may vary due to reproduction variations in the printing process, and some vehicle parts cannot be shown in certain photographs. Subaru Canada, Inc. reserves the right to discontinue or make changes at any time, without notice or incurring obligations, to colours, materials, equipment, accessories, features, specifications and models, or to change their prices. Some models shown may be from international markets and are not available in Canada; may be shown with equipment or accessories that are optional (at extra cost) or available only in certain combinations; or may be subject to product delays or not be available in Canada. Please visit subaru.ca for the latest information and specifications. For complete details on product updates and warranties, please contact your Subaru retailer. Ascent, BRZ, Crosstrek, Forester, EyeSight, Impreza, Legacy, Outback, WRX, STI, Lineartronic, X-MODE, STARLINK, Subaru and SUBARU BOXER are registered trademarks of SUBARU CORPORATION. Aha™ is a trademark of Harman International Industries, Inc. Alcantara® is a registered trademark of Alcantara S.p.A. Android™ is a trademark of Google LLC. Apple CarPlay® and iPod® are registered trademarks of Apple Inc. Bluetooth® is a registered trademark of Bluetooth SIG, Inc., America. Brembo® is a registered trademark of Brembo S.p.A. Michelin® is a registered trademark of Michelin North America, Inc. SACHS® is a registered trademark of ZF Sachs AG Corporation. SiriusXM®, Travel Link®, and the SiriusXM logo, channel names and logos are trademarks of Sirius XM Radio Inc. and are used under licence by Sirius XM Canada Inc. Subscriptions to SiriusXM Canada are subject to the SiriusXM Canada Customer Agreement and other terms and conditions. TORSEN® is a registered trademark of JTEKT Corporation. Printed in Canada. © 2019 Subaru Canada, Inc. 2020 model year.

Environmental Management System (EMS) ISO 14001:2015 certified by SGS

This booklet was printed on FSC® certified paper and contains 55% recycled fibre. It is chlorine-free, recyclable and biodegradable. FSC® (Forest Stewardship Council®) is an international organization that brings people together to find solutions that promote responsible management of the world's forests. This booklet was also produced using a "GREEN" printing process, which includes vegetable-based inks that leave no harmful residue. Please recycle.

RAINFOREST ALLIANCE CERTIFIED

FSC www.fsc.org MIX Paper from responsible sources FSC® C008420

subaru.ca

SUBARU CANADA, INC.
560 Suffolk Court, Mississauga, ON, L5R 4J7

Printed in Canada (SCB20E)